Bestseller

P11104 “Four-In-Line” Dual Circuit [320kg]

This bestselling glass vacuum lifter is a convenient tool for lifting glass, metal, ceramics and other non-porous materials. The P11104 enables users to quickly manoeuvre loads into position with its 180° lockable rotation and 90° tilt.

Engineered and tested for its reliability, safety and durability, the P11104 lifter comes with a 320kg lifting capacity and on-board power with a rechargeable battery, so there are no tricky cords to deal with during operation.

An optional short hook is also available when fitting glass under soffits or overhangs.

Key Features

- **Capacity: 320kg**
- **Dual circuit vacuum system with reserve tank, non-return valve and vacuum gauge for each circuit**
- **90° manual tilting from vertical to horizontal**
- **180° rotation, lockable in three positions**
- **Integral maintenance-free vacuum pump**
- **12v rechargeable battery with integral 110v or 240v charger and battery energy gauge**
- **Audio-visual low vacuum warning**
- **On-board control panel**

Reference Code

VGL11

Technical Specifications

Safe working load (smooth, clean surface at 60% vacuum)	capacity:	320kg
Number of suction cups	cups:	4
Suction cup	description:	black rubber, not abrasion resistant, heat resistant up to 100˚F
Suction cup diameter	diameter:	305mm
Suitable for lifting	material properties: surface: example:	gastight / non-porous smooth glass, plastic boards, ceramic plates, sheet metals, coated boards
Weight of lifter	approx:	34kg
Depth of lifter	depth:	233mm
Rotation	rotation:	90° manual left & right lockable
Tilt	tilt:	90° manual
Vacuum system	dual circuit:	1 pump, 2 vacuum reserve tanks
Voltage	pump: battery charger:	12v DC from rechargeable battery 110v/240v 50/60Hz single phase factory selectable
Optional accessories	optional:	short hook, radio remote control, curved pads (270kg capacity), stone pads (270kg capacity), low marking pads, heat resistant pads

P11104 "Four-In-Line" Dual Circuit

Optional radio remote control

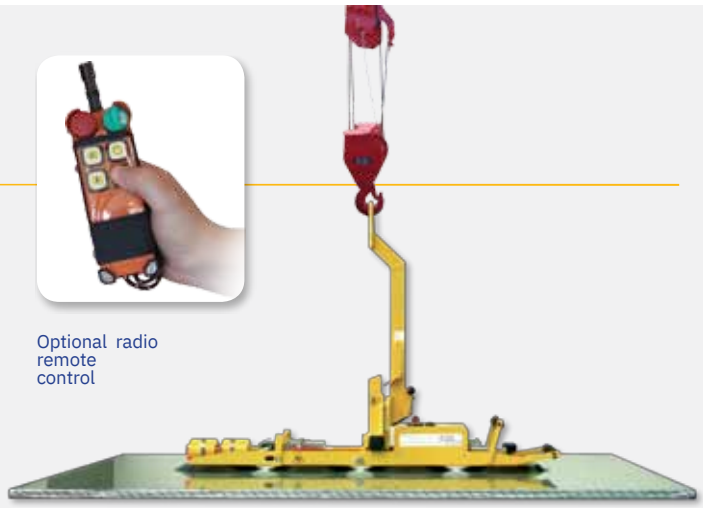

Technical Data (mm)

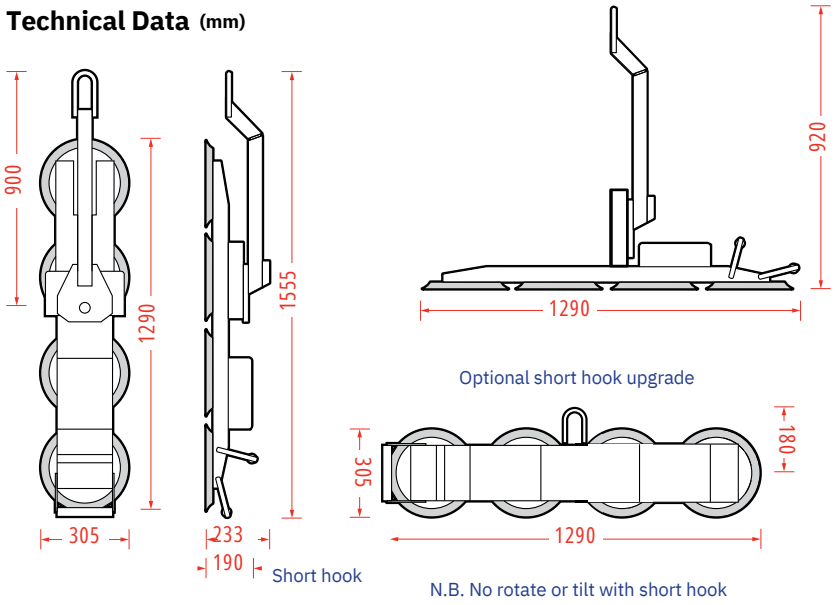
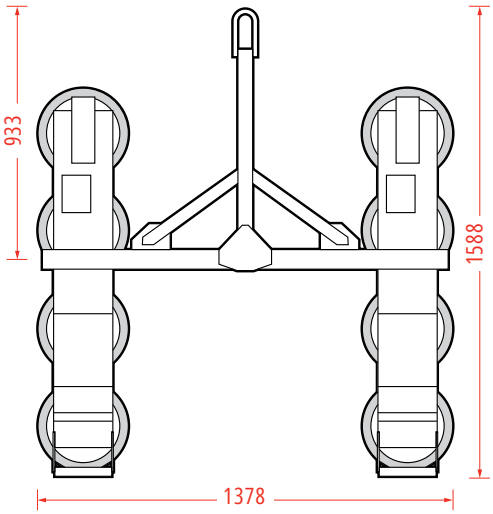
Lift Bar Option - 635kg