KAPPEL VACUUM LIFTER DSKE2 - 12V

- Designed, engineered and manufactured in Germany
- Dual vacuum system: 2 vacuum circuits, independent of each other
- Ideally suited to lifting fins or long narrow glass
- Load-bearing extensions can be attached to the standard four-cup rig, increasing the glass length and carrying capacity
- Supplied on a lightweight trolley

Technical characteristics	
Min Glass Size:	• 300kg - 1400mm x 380mm • 450kg - 2350mm x 380mm
Min Glass Width:	380mm
Power supply:	12 V battery mains-independent with integrated charger
Lift Capacity:	300kg (4 cups) / 450kg (6 cups)
Features:	• Voltage indicator shows the battery charge level • Vacuum display shows the current vacuum level • Acoustic warning signal
Total Rig Weight:	55kg
Rig Size:	2310 mm (Length) x 330mm (Width) x 190mm (Depth)
Tilt:	Manual – 90° with hydraulic tilt assist in holding load at any angle
Rotate:	360° unlimited, locks in every 45°

DRAWINGS

WLL-450kg

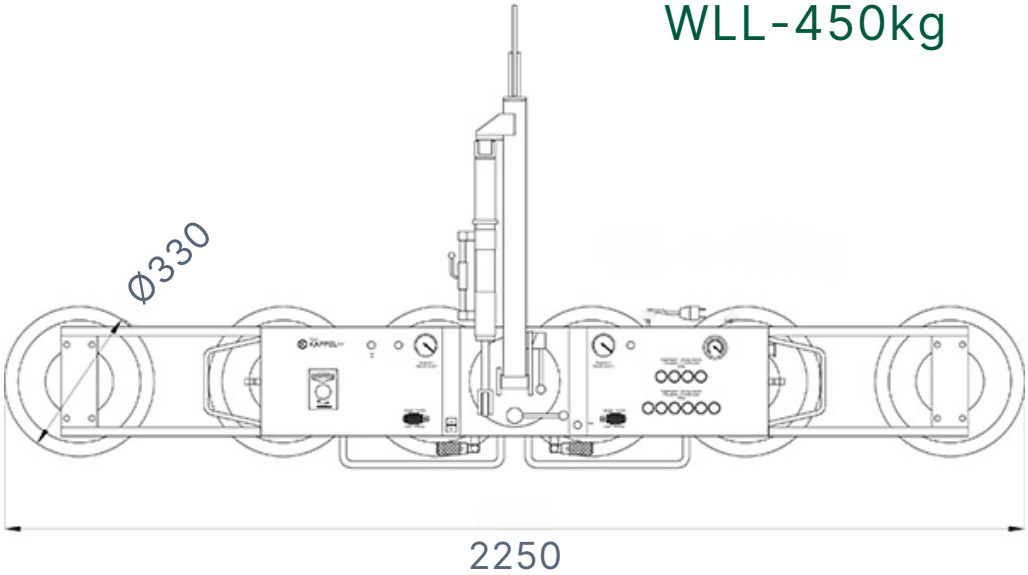
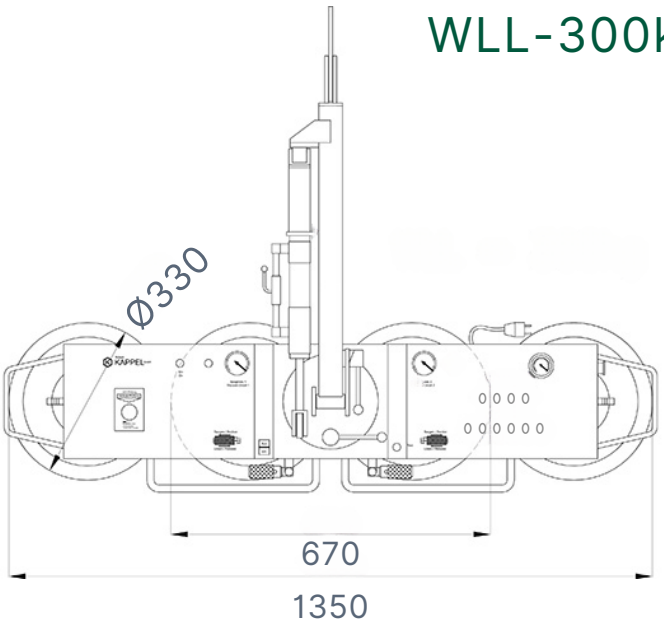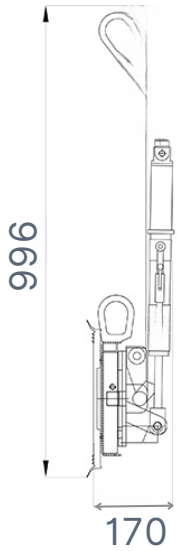
WLL-300kg